Design of Pre-Rake DS-UWB Downlink with Pre-Equalization

Zahra Ahmadian, Michael Botros Shenouda and Lutz Lampe
University of British Columbia, Vancouver, BC, Canada
Email: {zahraa, shenouda, Lampe}@ece.ubc.ca

Abstract

We consider the design of ultra-wideband (UWB) systems that enable high data rate communications for short-range wireless applications. In particular, we consider the downlink of a direct sequence UWB (DS-UWB) system in which the base station is equipped with multiple antennas and employs pre-rake combining, while each user employs a simple single antenna receiver. We propose the use of multiuser filters for the purpose of pre-equalization at the transmitter in order to mitigate the combined effects of intersymbol interference (ISI) and multiuser interference (MUI) that are generated at the receivers as a result of the wideband nature of the users' channels. For this system, we study the joint design of the transmitter's pre-equalization filters and each receiver's scalar gain under two design criteria. The first design minimizes the total transmitted power from the base station subject to achieving physical layer quality of service requirements of different users. For this design, we show that the calculation of the pre-equalization filters and the receiver gains can be formulated as an efficiently solvable convex optimization problem. In the second design, we consider the minimization of a weighted sum of each user's mean-square error. In order to obtain a computationally tractable solution for this design criterion, we exploit the dual DS-UWB uplink that employs rake combining and post-equalization filters at a central receiver. The numerical studies for each design criterion under realistic models of UWB channel propagation demonstrate the effectiveness of the proposed multiuser pre-equalization filter designs in mitigating ISI and MUI, and thus their ability to enable reliable pre-rake DS-UWB downlink transmission.

Index Terms

Ultra-wideband (UWB), direct sequence UWB (DS-UWB), pre-rake UWB, multiuser interference, intersymbol interference, pre-equalization, downlink transmission.

Some of the material in this paper has been presented at the 2010 IEEE International Conference on Communications (ICC) and (as an abstract) at the 2010 American Electromagnetics Conference (AMEREM).

I. Introduction

Ultra-wideband (UWB) technology is expected to be used as physical layer in low-cost, low-power, short-range, and high-capacity wireless communications links. The essential feature of UWB systems is the large signal bandwidth, which makes it possible to meet stringent constraints on transmission power mandated by regulators worldwide and to deploy battery-powered UWB transceivers with high life-expectancy. The unlicensed use and low-power consumption render UWB systems particularly useful for replacing the many wires in in-home applications and for providing a communication infrastructure in wireless sensor networks [1]–[3].

Notwithstanding the appeal of UWB technology, its widespread adoption is hampered by the relatively high receiver complexity. For example, wireless sensor networks consist of a large number of relatively simple devices (sensor motes, radio-frequency identification (RFID) tags, etc.) with severely limited signal processing capabilities making the implementation of rake, autocorrelation, or even energy detectors for UWB challenging. For such scenarios, it is desirable to move computational complexity to a few dedicated devices, such as fusion center, base station, etc., which have essentially unlimited signal processing power. This can be accomplished by pre-rake UWB systems, in which rake combining is performed at the transmitter rather than at the receiver.

In the UWB literature, two of the early works that considered use of pre-rake filters at the transmitter are [4] and [5]. The authors of [4] considered the use of time division duplexing for downlink and uplink transmission, which allows channel estimation via the reverse link, and compared different pre-rake configurations at the transmitter. In [5] it was shown that partial-pre-rake combining at the transmitter can achieve a performance close to that of a partial-rake receiver. Following [4], [5], there have been many works on pre-rake UWB system design, e.g. [6]–[13]. These include pre-rake UWB with channel phase precoding [6], where simple receivers perform phase estimation and send phase information to the central transmitter via a feedback channel, and the design and analysis of high data rate pre-rake direct sequence (DS) UWB multiple access systems [7], [8]. Furthermore, the benefits of using pre-rake combining together with antenna-arrays at the central transmitter were experimentally explored in [9]. Channel reciprocity was verified by experimental

measurements and it was shown that using channel estimation algorithms the downlink channel can effectively be estimated from the uplink received signal. The case of pre-rake filtering with multiple transmitting antennas for multiuser UWB has been considered in [10], in which time-offsetting of signals for different users has been proposed to suppress multiuser interference (MUI).

The major drawback of pre-rake combining is the remaining intersymbol interference (ISI) experienced at the receiver, which can result in high error floors. To overcome the error-floor problem, the application of post-equalization (at the receiver) was proposed in [11] and it was shown to significantly improve the system performance. Another approach to reduce the ISI was proposed in [12] by substituting the pre-rake filter with a minimum mean-square-error (MMSE) pre-filter of length greater than or equal to the channel impulse response. Since this pre-equalization is performed at the transmitter (fusion center, base station, etc.), the advantage of employing simple receiver terminals (sensor nodes, tags, etc.) is retained. In [13], the combination of pre-rake combining and pre-equalization was extended to DS-UWB transmitters equipped with multiple antennas for single user communication. In particular, [13] provided closed-form solutions for the pre-equalization filters (PEFs) used in the multiple input single output (MISO) DS-UWB system setting.

Outside the UWB context, the application of finite impulse response (FIR) transmit filters to DS modulation has widely been studied for code-division multiple access (CDMA) systems. For example, [14], [15] and [16] consider FIR transmit filter design for MISO CDMA and transmission with ISI resulting from short multipath channel lengths. Transmit filtering for SISO CDMA is considered in [17], [18] where again the ISI is negligible. Transmit filter optimization has also extensively been discussed in the multiple-input multiple-output (MIMO) transmission system literature. [19]–[22] are few examples of transmit filter design for frequency-flat channels. The case of MIMO ISI channels, which is closer related to UWB scenarios, is considered in, e.g., [23], [24], albeit with more complex receiver structures than those desired for pre-rake UWB systems. Furthermore, non-linear precoding has been applied to MIMO ISI channels in, e.g., [25].

In this paper, we consider a multiuser pre-rake DS-UWB broadcast communication system with multiple antennas at the base station and single antenna users. Different from the above-mentioned

UWB literature, we propose the use and design of *multiuser* PEFs to simultaneously suppress ISI and MUI. Different from most of the mentioned CDMA and MIMO works, the long delay spread of UWB channels necessitates a *multipath* problem formulation. This renders the system description different from representations considered in MIMO literature on transmit filter design for transmission over frequency flat channels (e.g. [20]–[22]), and therefore the procedures presented there cannot directly be applied to the design of pre-rake UWB systems. While we restrict the receiver structure to be a simple decision device, we allow user-specific scaling factors in the filter optimization (see e.g. [21] for frequency-flat MIMO transmission). This provides additional flexibility compared to the modified Wiener filter designs previously proposed in the CDMA literature [15], [16] which consider a common scaling factor for all users.

For the described UWB-transmission setup, we apply two complementary filter optimization paradigms. First, considering the transmit power restrictions for UWB systems, we aim at minimizing the transmit power required to attain a desired level of quality of service (QoS), measured in terms of mean-square error (MSE) between the transmitted and estimated message, at each user. We formulate this design problem as a convex optimization problem, which makes it amenable for solution by computationally efficient algorithms. Second, we assume a preset level of available transmit power and maximize the QoS, i.e., minimize the weighted sum of each user's MSE. We propose an efficient method for solving this problem by exploiting the duality (cf. e.g. [26]–[30]) between the DS-UWB downlink and the dual uplink that employs rake combining and post-equalization filters at a central receiver. Our results show that the obtained multiuser PEF designs are highly effective in mitigating both ISI and MUI and thus (i) in reducing total transmission power required to meet QoS targets and (ii) in improving QoS given a fixed power budget. Using a Gaussian assumption for ISI and MUI signal components the benefit of the proposed PEF design strategies is also verified in terms of bit-error rate (BER) performance.

The remainder of this paper is organized as follows. The system model for the multiuser pre-rake DS-UWB broadcast transmission system is introduced in Section II. The problem formulation and the proposed multiuser PEF designs are developed in Sections III and IV. Section V presents numerical

performance results, and conclusion are provided in Section VI.

We use the following notations. $\mathcal{E}\{.\}$, $[.]^T$, $[.]^H$, $\Re\{.\}$, and $\mathrm{diag}\{.\}$ denote statistical expectation, transposition, Hermitian transposition, the real part of a complex number, and (block) diagonal matrix, respectively. $[.]^*$ represents the optimal value of a parameter and $[.]*[.]$ stands for linear convolution.

II. System Model

We consider a multiuser pre-rake UWB broadcast communication system in which the base station is equipped with M antennas to enable high data rates, while each of the U users employs a single-antenna receiver. Fig. 1 shows the block diagram of the discrete-time system model. As in e.g. [11]–[13] we consider the complex baseband discrete-time model, and thus baseband and carrier-modulated transmission are included.

A. Transmitter

We consider a DS-UWB transmission system similar to DS-UWB considered in the 802.15.3a task group, which also includes UWB transmission without spreading as a special case, e.g. [13]. For this system, we propose to incorporate multiuser pre-equalization filters $\boldsymbol{q}_{u,m}$, $u = 1, \ldots, U$, $m = 1, \ldots, M$, (see Fig. 1) to mitigate the effects of ISI and MUI at the receivers. We use $a_u[n]$ to denote the data symbol intended for the uth user at symbol time n. We assume that $a_u[n]$ is chosen from a constellation with unit average power, i.e., $\mathcal{E}\{|a_u[n]|^2\} = 1$ and that data symbols are independent of each other (with respect to u and n). The duration of each symbol will be denoted T. The uth user's data symbols are processed by M PEFs $\boldsymbol{q}_{u,m} = [q_{u,m}[0], \ldots, q_{u,m}[L_q - 1]]$, $m = 1, \ldots, M$, of length L_q each. The output of each PEF, $v_{u,m}[n]$, is given by

$$v_{u,m}[n] = a_u[n] * q_{u,m}[n] = \sum_{\ell=0}^{L_q-1} q_{u,m}[\ell] a_u[n-\ell] \ . \tag{1}$$

This output is then upsampled by a factor of N and processed with the user's unique spreading sequence $c_u[k]$ of length N and chip duration $T_c = T/N$. The spreading sequences are normalized such that $\sum_{k=1}^{N} |c_u[k]|^2 = 1$. Following the spreading sequence, the signal undergoes pre-rake combining using filters $p_{u,m}[k]$, $m = 1, \ldots, M$, of length L_p. Each pre-rake combining filter is

assumed to be the time reversed conjugate version of the corresponding discrete channel impulse response, $h_{u,m}[k]$, (note that $[.]^H$ applied to a scalar variable indicates complex conjugate)

$$p_{u,m}[k] = h^H_{u,m}[L_p - k - 1] \ , \ 0 \leq k < L_p \ .$$

The partial-pre-rake combining with $L_p \leq L_h$ includes all-pre-rake combining as a special case when $L_p = L_h$, where L_h is the length of $h_{u,m}[k]$. The transmitted signal of user u from the mth antenna can be written as

$$s_{u,m}[k] = \sum_{\ell=-\infty}^{\infty} v_{u,m}[\ell]\tilde{p}_{u,m}[k - \ell N] \ , \tag{2}$$

where $\tilde{p}_{u,m}[k] = c_u[k] * p_{u,m}[k]$ combines the effects of spreading and pre-rake combining. Finally, the signal transmitted from the mth antenna $s_m[k]$, is the sum of all $s_{u,m}[k]$ (see Fig. 1),

$$s_m[k] = \sum_{u=1}^{U} s_{u,m}[k].$$

B. Channel

We adopt the channel model developed during the standardization efforts by the IEEE 802.15.3a/4a task groups [31], according to which the channel impulse response can be modelled as

$$h_{u,m}(t) = \sum_{\ell=0}^{L_{\text{c}}} \sum_{k=0}^{L_{\text{r}}} \alpha_{k,\ell} \text{e}^{\text{j}\phi_{k,\ell}} \delta(t - T_\ell - \tau_{k,\ell}) \ ,$$

where L_c is the number of clusters, L_r is the number of rays within a cluster, $\alpha_{k,\ell}$ is the tap weight of the kth component in the ℓth cluster, T_ℓ is the delay of the ℓth cluster, $\tau_{k,\ell}$ is the delay of the kth multipath component relative to the ℓth cluster arrival time T_ℓ, and $\phi_{k,\ell}$ is uniformly distributed in $[0, 2\pi)$. The statistics of the parameters $(\alpha_{k,\ell}, T_\ell, \tau_{k,\ell})$ are collectively specified in different channel models (CMs) according to different propagation environments [31]. The equivalent baseband discrete time channel impulse response can be written as

$$h_{u,m}[k] = g_{\text{Tx}}(t) * h_{u,m}(t) * g_{\text{Rx}}(t)\Big|_{kT_c}, \tag{3}$$

where $g_{\text{Tx}}(t)$ and $g_{\text{Rx}}(t)$ are the transmitter pulse-shaping filter and the receiver noise-rejection filter that satisfy the first Nyquist criterion, respectively.

C. Receiver

As shown in Fig. 1, the discrete-time received signal at each user is filtered using a time reversed version of its spreading sequence. The filtered received signal is then sampled at time indices $k = Nn + k_0$ where $k_0 = L_p + N - 2 - N\lfloor (L_p + N - 2)/N \rfloor$ is the sampling phase that is chosen to be the time at which the sampled desired signal reaches its maximum, cf. [13]. Hence, the sampled output at the uth receiver can be written as

$$r_u[n] = \sum_{m=1}^{M} \sum_{i=1}^{U} \sum_{\ell=-\infty}^{\infty} w_{i,m,u}[N\ell + k_0] v_{i,m}[n-\ell] + z_u[n] \ , \tag{4}$$

where $z_u[n]$ is the sampled noise at the uth receiver that is assumed to be additive white Gaussian with variance σ_z^2, and $w_{i,m,u}[k] = \tilde{p}_{i,m}[k] * h_{u,m}[k] * c_u[N-1-k]$ is the combined impulse response of the ith user spreading sequence and pre-rake combining, channel impulse response from the mth transmitter antenna to the uth user, and the time reversed version of the spreading sequence of the uth user. We assume that each user employs a simple symbol-by-symbol detection according to

$$\hat{a}[n - n_0] = \mathrm{D}\{\alpha_u r_u[n]\} \ , \tag{5}$$

where D denotes the slicer operation (i.e., decision towards the nearest signal point), n_0 is the decision delay common to (pre-)equalization systems, and α_u is the receiver gain of the uth user (see Fig.1).

Note that having user specific gains allows more degrees of freedom in the design of the transmit filters compared to the case with common receiver gain (as for example considered in [15], [16]). While receivers need to be notified about the gains, if multilevel transmission is applied, for the case of binary phase-shift keying (BPSK) signaling, scaling at the receiver need not actually be implemented as is obvious from (5).

We adjust the decision delay as $n_0 = \lceil \frac{NL_q + 2N + 2L_p - k_0 - 4}{N} \rceil / 2$, which attempts to maximize the desired signal component at the decision time. Numerical evidence suggests that little can be gained by further optimizing n_0 for each individual channel realization. Finally, it is assumed that the actual information transmission starts after the first n_0 bits.

In the following two sections, we present two designs for the joint optimization of the multiuser pre-equalization filters, $\boldsymbol{q}_{u,m}$, $u = 1, \ldots, U$, $m = 1, \ldots, M$, and each user's scalar equalization gains, α_u, $u = 1, \ldots, U$, subject to different pertinent objectives and constraints.

III. Power Minimization Design

In this section, we will present the first design, whose objective is the minimization of the total amount of transmitted power from the UWB base station subject to achieving a physical layer QoS requirement for each user. Since UWB systems operate as spectrum underlay systems and need to avoid harmful interference at receivers of incumbent (licensed) wireless systems, minimization of transmission power is of immediate relevance for UWB devices.

A. Preliminaries

In order to facilitate the exposition of our design, we first re-write (4) in the compact matrix form

$$r_u[n] = \sum_{i=1}^{U} \boldsymbol{q}_i \boldsymbol{W}_{i,u} \boldsymbol{a}_i^T + z_u[n] \ , \tag{6}$$

where $\boldsymbol{a}_u = \big[a_u[n], \ldots, a_u[n-L_t+1]\big] \in \mathbb{R}^{1\times L_t}$ is the vector of data symbols of the uth user to be transmitted at time instances $n, \ldots, n-L_t+1$, $\boldsymbol{q}_u = [\boldsymbol{q}_{u,1}, \ldots, \boldsymbol{q}_{u,M}] \in \mathbb{C}^{1\times ML_q}$ is the concatenated multiuser PEF of user u, and $\boldsymbol{W}_{i,u} = \big[\boldsymbol{W}_{i,1,u}^T \, \boldsymbol{W}_{i,2,u}^T \ldots \boldsymbol{W}_{i,M,u}^T\big]^T$ is an $ML_q \times L_t$ block matrix. Each block $\boldsymbol{W}_{i,m,u}$ is an $L_q \times L_t$ Toeplitz matrix with vector

$$\big[w_{i,m,u}[k_0],\, w_{i,m,u}[N+k_0],\, \ldots,\, w_{i,m,u}[N(L_w-1)+k_0],\, \mathbf{0}_{L_q-1}\big]$$

as first row, and vector $[w_{i,m,u}[k_0],\, \mathbf{0}_{L_t-1}]^T$ as its first column, where $L_w = \lceil (L_p+L_h+2N-3-k_0)/N \rceil$ is the length of the overall channel impulse response measured in data-symbol intervals. Due to the effect of the PEFs $\boldsymbol{q}_{i,u}$, the dimensions of $\boldsymbol{a}_u$ and $\boldsymbol{W}_{i,u}$ in (6) depend on $L_t = L_q + L_w - 1$.

Using the matrix form in (6), we proceed to obtain an expression for the sum of transmitted signal power over one symbol interval. This can be expressed as

$$P^{\text{DL}} = \mathcal{E}\left\{ \sum_{m=1}^{M} \sum_{k=Nn}^{N(n+1)-1} \Big| s_m[k] \Big|^2 \right\} = \sum_{u=1}^{U} \sum_{m=1}^{M} \sum_{k=Nn}^{N(n+1)-1} \mathcal{E}\left\{ \big| s_{u,m}[k] \big|^2 \right\} = \sum_{u=1}^{U} P_u^{\text{DL}} \ , \tag{7}$$

where the last step follows from the independence of users' messages and their zero-mean constellations, and P_u^{DL} is the power of the uth user's transmitted signal. Using derivations analogous to that of the special case of the single-user system in [13], it can be shown that P_u^{DL} is given by

$$P_u^{\text{DL}} = \boldsymbol{q}_u \boldsymbol{\Phi}_u \boldsymbol{q}_u^H \ , \tag{8}$$

where $\mathbf{\Phi}_u = \mathrm{diag}\{\mathbf{\Phi}_{u,1},\ \mathbf{\Phi}_{u,2},\ \ldots,\ \mathbf{\Phi}_{u,M}\}$ is a block diagonal matrix whose blocks $\mathbf{\Phi}_{u,m}$ are Hermitian Toeplitz matrices with the first row defined as

$$\left[\phi_{u,m}[0],\ \phi_{u,m}[-N],\ \ldots,\ \phi_{u,m}[-N(L_q-1)]\right] ,$$

where $\phi_{u,m}[k] = \tilde{p}_{u,m}[k] * \tilde{p}^H_{u,m}[-k]$.

Next, we proceed to obtain an expression of the QoS measure of each user. To this end, we will consider the MSE and we will show that the MSE can be related to other QoS measures such as the signal-to-interference-and-noise ratio (SINR) and BER. The MSE of the uth user is defined as

$$\sigma_u^2 = \mathcal{E}\{|a_u[n-n_0] - \alpha_u r_u[n]|^2\}.$$

Using the expression in (6), this can be evaluated as

$$\sigma_u^2 = 1 + |\alpha_u|^2 \sum_{i=1}^{U} \boldsymbol{q}_i \boldsymbol{W}_{i,u} \boldsymbol{W}_{i,u}^H \boldsymbol{q}_i^H - \alpha_u^H \boldsymbol{e}_{n_0} \boldsymbol{W}_{u,u}^H \boldsymbol{q}_u^H - \alpha_u \boldsymbol{q}_u \boldsymbol{W}_{u,u} \boldsymbol{e}_{n_0}^T + |\alpha_u|^2 \sigma_z^2 , \tag{9}$$

where $\boldsymbol{e}_{n_0}$ is a unit row vector whose elements are all zero except the n_0^{th} element which is equal to 1. Setting $1 + |\alpha_u|^2 \boldsymbol{q}_u \boldsymbol{W}_{u,u} \boldsymbol{W}_{u,u}^H \boldsymbol{q}_u^H - \alpha_u^H \boldsymbol{e}_{n_0} \boldsymbol{W}_{u,u}^H \boldsymbol{q}_u^H - \alpha_u \boldsymbol{q}_u \boldsymbol{W}_{u,u} \boldsymbol{e}_{n_0}^T = \|\alpha_u \boldsymbol{q}_u \boldsymbol{W}_{u,u} - \boldsymbol{e}_{n_0}\|^2$, the MSE in (9), can further be written as

$$\sigma_u^2 = \left\| \left[\alpha_u \boldsymbol{q}_1 \boldsymbol{W}_{1,u}, \ldots, \alpha_u \boldsymbol{q}_u \boldsymbol{W}_{u,u} - \boldsymbol{e}_{n_0}, \ldots, \alpha_u \boldsymbol{q}_U \boldsymbol{W}_{U,u}, \alpha_u \sigma_z \right] \right\|^2 . \tag{10}$$

B. Problem Formulation and Convex Design

Using the expressions of the total transmitted power in (8), we can now formulate the power minimization problem. Given MSE constraints $\sigma_u^2 \leq \zeta_u$, $0 \leq \zeta_u < 1$, $u = 1, \ldots, U$, we would like to design the multiuser PEFs and scalar equalization gains such that the total transmission power is minimized; that is

$$\min_{\substack{\boldsymbol{q}_1 \ \cdots \ \boldsymbol{q}_U \\ \alpha_1 \ \cdots \ \alpha_U}} \quad \sum_{u=1}^{U} \boldsymbol{q}_u \mathbf{\Phi}_u \boldsymbol{q}_u^H \tag{11a}$$

$$\text{s.t.} \quad \sigma_u^2 \leq \zeta_u,\ 1 \leq u \leq U . \tag{11b}$$

In order to show the equivalence of the design problem in (11) to a convex problem, we first observe that there is no loss of generality in considering real values for the receiver gains α_u, $u = 1, \ldots, U$.

In fact, it can be verified that if the optimal solution of (11) is the set $\{(\boldsymbol{q}_u, \alpha_u)|u = 1, \ldots, U\}$, then $\{(\boldsymbol{q}_u \mathrm{e}^{\mathrm{j}\angle\alpha_u}, |\alpha_u|)|u = 1, \ldots, U\}$ will also yield the same value of the objective function in (11a) and will still satisfy each of the constraints in (11b). Using the above observation, we now proceed by showing that the set of non-convex constraints in (11b) can be formulated as a set which is convex in $\boldsymbol{q}_u$ and $\gamma_u = 1/\alpha_u$. Indeed, using (10) each constraint in (11b) can be written as

$$\left\| \left[\boldsymbol{q}_1 \boldsymbol{W}_{1,u}, \ldots, \boldsymbol{q}_u \boldsymbol{W}_{u,u} - \boldsymbol{e}_{n_0} \gamma_u, \ldots, \boldsymbol{q}_U \boldsymbol{W}_{U,u}, \sigma_z \right] \right\|^2 \quad \leq \quad \zeta_u \gamma_u^2 \,. \tag{12}$$

Now that we have shown that the MSE constraints can be represented as convex quadratic constraints in $\{(\boldsymbol{q}_u, \gamma_u)\}$, we conclude the equivalence of the problem formulation in (11) to convex optimization by observing that the objective function in (11a) is a sum of quadratic terms of the form $\boldsymbol{q}_u \boldsymbol{\Phi}_u \boldsymbol{q}_u^H$, where each $\boldsymbol{\Phi}_u$ is a positive semi-definite matrix. Using this observation, and the representation of MSE constraints in (12), we can formulate the design problem in (11) as the following quadratically constrained quadratic programming (QCQP) problem:

$$\min_{\substack{\boldsymbol{q}_1 \ \cdots \ \boldsymbol{q}_U \\ \gamma_1 \ \cdots \ \gamma_U}} \quad \sum_{u=1}^{U} \boldsymbol{q}_u \boldsymbol{\Phi}_u \boldsymbol{q}_u^H \tag{13a}$$

$$\text{s.t.} \quad \left\| \left[\boldsymbol{q}_1 \boldsymbol{W}_{1,u}, \ldots, \boldsymbol{q}_u \boldsymbol{W}_{u,u} - \boldsymbol{e}_{n_0} \gamma_u, \ldots, \boldsymbol{q}_U \boldsymbol{W}_{U,u}, \sigma_z \right] \right\|^2 \leq \zeta_u \gamma_u^2 \,, \quad 1 \leq u \leq U. \tag{13b}$$

The class of QCQP problems is a subclass of convex optimization problems for which the global optimal solution can be efficiently obtained using interior-point method algorithms [32].

C. Properties of the Optimal Design

In this subsection two properties of the optimal solution of the design problem in (13) are presented.

Lemma 3.1: If the optimization problem in (13) is feasible, then the optimal solution satisfies the inequalities in (13b) with equality. That is, $\sigma_u^2 = \zeta_u$ for $u = 1, \ldots, U$.

Lemma 3.2: Let $\{\boldsymbol{q}_u^*, \gamma_u^* | u = 1, \ldots, U\}$ be the optimal solution of the power minimization problem design in (13). For each user, the achieved SINR is related to its MSE requirement by $\zeta_u = \frac{1}{\mathrm{SINR}_u + 1}$.

Proof: Using the Lagrangian and Karush-Kuhn-Tucker (KKT) conditions [32] associated with the optimization problem in (13), we obtain the relations

$$\boldsymbol{q}_u^* = \lambda_u^* \gamma_u^* \; \boldsymbol{e}_{n_0} \boldsymbol{W}_{u,u}^H \left[\boldsymbol{\Phi}_u + \sum_{i=1}^{U} \lambda_i^* \boldsymbol{W}_{i,u} \boldsymbol{W}_{i,u}^H \right]^{-1} , \tag{14}$$

and

$$\lambda_u^* \left[\gamma_u^* \left(1 - \zeta_u\right) - \Re\{\boldsymbol{q}_u^* \boldsymbol{W}_{u,u} \boldsymbol{e}_{n_0}^T\} \right] = 0 \; . \tag{15}$$

where λ_u^* in (14) is the optimal dual variable associated with QoS constraint of user u. We observe that $\lambda_u^* \neq 0$ for all $1 \leq u \leq U$, since from (14), if λ_u^* is zero, then the optimal filter design $\boldsymbol{q}_u^*$ is zero, which would violate the MSE constraints. From the complementary slackness condition Lemma 3.1 follows.

For the proof of Lemma 3.2 we need to obtain an expression for the received SINR. We first write the received signal $r_u[n]$ in (6) as

$$r_u[n] = \boldsymbol{q}_u \boldsymbol{W}_{u,u} \boldsymbol{e}_{n_0}^T a_u[n_0] + \sum_{i=1,\, i \neq u}^{U} \boldsymbol{q}_i \boldsymbol{W}_{i,u} \boldsymbol{a}_i^T + \boldsymbol{q}_u \boldsymbol{W}_{u,u} \boldsymbol{a}_{u,n_0}^T + z_u[n] \; , \tag{16}$$

where $\boldsymbol{a}_{u,n_0}^T$ is the vector of the uth user's message with its n_0^{th} element replaced by a zero. Using (16) the effective SINR at the receiver for the downlink transmission is given as a function of the pre-equalization filter used (in our case $\boldsymbol{q}_u^*$) by

$$\text{SINR}_u = \frac{\boldsymbol{q}_u^* \boldsymbol{W}_{u,u} \boldsymbol{e}_{n_0}^T \boldsymbol{e}_{n_0} \boldsymbol{W}_{u,u}^H \boldsymbol{q}_u^{*H}}{\sum\limits_{i=1}^{U} \boldsymbol{q}_i^* \boldsymbol{W}_{i,u} \boldsymbol{W}_{i,u}^H \boldsymbol{q}_i^{*H} - \boldsymbol{q}_u^* \boldsymbol{W}_{u,u} \boldsymbol{e}_{n_0}^T \boldsymbol{e}_{n_0} \boldsymbol{W}_{u,u}^H \boldsymbol{q}_u^{*H} + \sigma_z^2} \; . \tag{17}$$

Equivalently, (17) can be written as

$$\frac{1}{\text{SINR}_u + 1} = 1 \; - \; \frac{\boldsymbol{q}_u^* \boldsymbol{W}_{u,u} \boldsymbol{e}_{n_0}^T \boldsymbol{e}_{n_0} \boldsymbol{W}_{u,u}^H \boldsymbol{q}_u^{*H}}{\sum\limits_{i=1}^{U} \boldsymbol{q}_i^* \boldsymbol{W}_{i,u} \boldsymbol{W}_{i,u}^H \boldsymbol{q}_i^{*H} + \sigma_z^2} \; . \tag{18}$$

Furthermore, from (15) we have

$$\gamma_u^* = \frac{\Re\{\boldsymbol{q}_u^* \boldsymbol{W}_{u,u} \boldsymbol{e}_{n_0}^T\}}{1 - \zeta_u} \; . \tag{19}$$

Substituting this result in (13b) and by using the result from Lemma 3.1, we have

$$\zeta_u = 1 - \frac{\Re\{\boldsymbol{e}_{n_0}\boldsymbol{W}_{u,u}^H\boldsymbol{q}_u^{*H}\}^2}{\sum_{i=1}^{U}\boldsymbol{q}_i^*\boldsymbol{W}_{i,u}\boldsymbol{W}_{u,i}^H\boldsymbol{q}_i^{*H} + \sigma_z^2} \ . \tag{20}$$

Finally, to show that right hand side of (20) is equivalent to that of (18), we show that $\boldsymbol{q}_u^*\boldsymbol{W}_{u,u}\boldsymbol{e}_{n_0}^T$ is a real quantity. Indeed, using (14) we have

$$\boldsymbol{q}_u^*\boldsymbol{W}_{u,u}\boldsymbol{e}_{n_0}^T = \lambda_u^*\gamma_u^* \ \boldsymbol{e}_{n_0}\boldsymbol{W}_{u,u}^H\left[\boldsymbol{\Phi}_u + \sum_{i=1}^{U}\lambda_i\boldsymbol{W}_{u,i}\boldsymbol{W}_{u,i}^H\right]^{-1}\boldsymbol{W}_{u,u}\boldsymbol{e}_{n_0}^T \ , \tag{21}$$

which is a scalar real quantity. This completes the proof of Lemma 3.2. ■

Lemma 3.2 shows that the selection of the MSE as a measure of the QoS of each user is not restrictive, since the SINR that is achieved by each user using the optimal solution of the power minimization problem in (13) is a function of each MSE constraint ζ_u. While the given relation between MSE and SINR is well-known for MMSE receiver optimization problems, e.g. [27], [33], here we have shown that the relation holds for the designs from the power minimization in (13). The above result can be used to evaluate the BER of the system in terms of the readily available MSE. Assuming the received MUI and ISI are approximated as zero-mean Gaussian distributed random variables and for example, BPSK modulation, then the corresponding BER at receiver terminal u is given by

$$\mathrm{BER}_u = Q\left(\sqrt{2\ \mathrm{SINR_u}}\right) = Q\left(\sqrt{\frac{2}{\zeta_u} - 2}\right) \ . \tag{22}$$

Considering the relation between the MSE and SINR and the Gaussian approximation, we expect that gains achieved by the proposed pre-equalization scheme in terms of uncoded BER according to (22) translate into BER improvements also for (interleaved) coded systems through some function $\mathrm{BER} = f(\mathrm{SINR})$ which is specific to the applied coding scheme.

IV. Mean Squared Error Minimization Design

In this section we propose a design approach that minimizes a weighted sum of the MSE of each user subject to a total power constraint denoted as P_{max}. Using the expressions for MSEs and total

power in (9) and (8) respectively, we can formulate the problem as

$$\min_{\substack{\boldsymbol{q}_1 \ \cdots \ \boldsymbol{q}_U \\ \alpha_1 \ \cdots \ \alpha_U}} \quad \sum_{u=1}^{U} \rho_u \left[1 + |\alpha_u|^2 \left(\sum_{i=1}^{U} \boldsymbol{q}_i \boldsymbol{W}_{i,u} \boldsymbol{W}_{i,u}^H \boldsymbol{q}_i^H + \sigma_z^2 \right) - \alpha_u^H \boldsymbol{e}_{n_0} \boldsymbol{W}_{u,u}^H \boldsymbol{q}_u^H - \alpha_u \boldsymbol{q}_u \boldsymbol{W}_{u,u} \boldsymbol{e}_{n_0}^T \right] \tag{23a}$$

$$\text{s.t.} \quad \sum_{u=1}^{U} \boldsymbol{q}_u \boldsymbol{\Phi}_u \boldsymbol{q}_u^H \leq P_{max} \ , \tag{23b}$$

where ρ_u is the QoS weighting coefficient for user u. Unlike the power minimization design in (13), the objective in (23a) is not jointly convex in all the design variables $\{(\boldsymbol{q}_u, \alpha_u)\}$. Hence, the optimization problem in (23) is non-convex. To arrive at an effective solver, we will make use of duality by considering a DS-UWB uplink with power loading at the transmitters, and combined rake front-end and equalization filtering at the common receiver. Duality between downlink and uplink has been a useful tool for the design of multiuser systems, e.g. [26], [29], [30], we generalize this approach to UWB systems with (pre-) rake combining and (pre-) equalization filtering.

The dual DS-UWB uplink consists of U single antenna transmitters and a receiver with M antennas as shown in Fig. 2. At each transmitter the data symbol $a_u[n]$ is upsampled by a factor of N and spread with sequence $c_u[N-1-k]$, and the output is multiplied by the transmission gain β_u. Hence the per user transmit power is $|\beta_u|^2$ and the total transmit power for all users of the uplink is $P^{\mathrm{UL}} = \sum_{u=1}^{U} |\beta_u|^2$. We assume that the channel impulse response between the uth transmitter and the mth receiving antenna is the conjugate of the corresponding downlink channel $h_{u,m}[k]$. At the receiver, the signal from each antenna is processed by a rake combining filter, $p_{u,m}[k]$, and the spreading sequence, $c_u[k]$. The output is then downsampled and processed by an equalization filter, $\boldsymbol{f}_{u,m} = [f_{u,m}[0] \, , \, \ldots \, , \, f_{u,m}[L_q - 1]]^T$. The outputs of these equalization filters are combined to obtain the input to the detector for the uth user. Using derivations similar to those of Section III, one can verify that the detector input signal $r_u^{\mathrm{UL}}[n]$ can be written in the following matrix form

$$r_u^{\mathrm{UL}}[n] = \sum_{i=1}^{U} \beta_i \boldsymbol{a}_i \boldsymbol{W}_{u,i}^H \boldsymbol{f}_u + z_u^{\mathrm{UL}}[n] \ , \tag{24}$$

where $\boldsymbol{f}_u = [\boldsymbol{f}_{u,1}^T \, , \ldots \, , \, \boldsymbol{f}_{u,M}^T]^T$and $z_u^{\mathrm{UL}}[n]$ is the noise at the input of the detector. Assuming that σ_z^2 is the noise variance at the input of each antenna, we find the variance of $z_u^{\mathrm{UL}}[n]$ as $\boldsymbol{f}_u^H \boldsymbol{\Phi}_u \boldsymbol{f}_u \sigma_z^2$.

From the expression of $r_u^{\mathrm{UL}}[n]$ the uplink MSE of the uth user can be given as

$$\nu_u^2 = 1 + \sum_{i=1}^{U} |\beta_i|^2 \boldsymbol{f}_u^H \boldsymbol{W}_{u,i} \boldsymbol{W}_{u,i}^H \boldsymbol{f}_u - \beta_u \boldsymbol{e}_{n_0} \boldsymbol{W}_{u,u}^H \boldsymbol{f}_u - \beta_u^H \boldsymbol{f}_u^H \boldsymbol{W}_{u,u} \boldsymbol{e}_{n_0}^T + \boldsymbol{f}_u^H \boldsymbol{\Phi}_u \boldsymbol{f}_u \sigma_z^2 \ . \tag{25}$$

Defining the relation between uplink and downlink parameters as $\alpha_u = \beta_u^H / g_u$ and $\boldsymbol{q}_u = g_u \boldsymbol{f}_u^H$, where g_u is a positive scalar, and setting up the U equations $\sigma_u^2 = \nu_u^2$, we obtain (cf. [29])

$$\left[g_1^2,\ g_2^2, \ldots,\ g_U^2\right] \boldsymbol{A} = \left[\ |\beta_1|^2,\ |\beta_2|^2, \ldots,\ |\beta_U|^2\right]\ , \tag{26}$$

where $\boldsymbol{A}$ is a square matrix of size U with off-diagonal entries $A_{i,j} = -\frac{|\beta_i|^2}{\sigma_z^2} \boldsymbol{f}_j^H \boldsymbol{W}_{j,i} \boldsymbol{W}_{j,i}^H \boldsymbol{f}_j$ and diagonal entries $A_{i,i} = \sum\limits_{k=1, k\neq i}^{U} \frac{|\beta_k|^2}{\sigma_z^2} \boldsymbol{f}_i^H \boldsymbol{W}_{i,k} \boldsymbol{W}_{i,k}^H \boldsymbol{f}_i + \boldsymbol{f}_i^H \boldsymbol{\Phi}_i \boldsymbol{f}_i$. It can be verified that $\boldsymbol{A}$ is a diagonally dominant matrix and, hence, non-singular. Hence, given a design of the transmitter and the receiver of the dual DS-UWB uplink, one can compute the transformation parameters g_u using (26) and use them to obtain the corresponding design of the DS-UWB downlink that results in the same set of users' MSEs as the dual uplink. Furthermore, using the transformation parameters g_u given in (26) the total transmitted power in both the uplink and downlink are the same, i.e., $P^{\mathrm{DL}} = P^{\mathrm{UL}}$.

The DS-UWB uplink design problem that minimizes a weighted sum of users' MSEs subject to a constraint on the total power transmitted by all users can be formulated as

$$\min_{\substack{\boldsymbol{f}_1 \ldots \boldsymbol{f}_U \\ \beta_1 \ldots \beta_U}} \sum_{u=1}^{U} \rho_u \left[1 + \sum_{i=1}^{U} |\beta_i|^2 \boldsymbol{f}_u^H \boldsymbol{W}_{u,i} \boldsymbol{W}_{u,i}^H \boldsymbol{f}_u - \beta_u \boldsymbol{e}_{n_0} \boldsymbol{W}_{u,u}^H \boldsymbol{f}_u - \beta_u^H \boldsymbol{f}_u^H \boldsymbol{W}_{u,u} \boldsymbol{e}_{n_0}^T + \boldsymbol{f}_u^H \boldsymbol{\Phi}_u \boldsymbol{f}_u \sigma_z^2 \right] \tag{27a}$$

$$\text{s.t.} \quad \sum_{u=1}^{U} |\beta_u|^2 \leq P_{max} \ . \tag{27b}$$

Unlike the downlink, the expression for uplink MSE of the uth user, ν_u^2, is a function only of equalization filter coefficients $\boldsymbol{f}_u$ of the uth user and is independent of the filter coefficients of other users, $\boldsymbol{f}_i, i \neq u$. This observation allows each term in the summation in (27a), which is a convex quadratic function of $\boldsymbol{f}_u$, to be minimized independently. Hence, by setting the derivative of each ν_u^2 with respect to $\boldsymbol{f}_u$ to zero we obtain an expression of the optimal receiver filter coefficients

$$\boldsymbol{f}_u = \beta_u^H\ \boldsymbol{T}_u^{-1}\ \boldsymbol{W}_{u,u}\ \boldsymbol{e}_{n_0}^T\ , \tag{28}$$

where $\boldsymbol{T}_u = \sum_{i=1}^{U} |\beta_i|^2 \boldsymbol{W}_{u,i} \boldsymbol{W}_{u,i}^H + \sigma_z^2 \boldsymbol{\Phi}_u$. Using the expression for optimal $\boldsymbol{f}_u$, the expression for each MSE in (25) reduces to

$$\nu_u^2 = 1 - |\beta_u|^2 \boldsymbol{e}_{n_0} \boldsymbol{W}_{u,u}^H \boldsymbol{T}_u^{-1} \boldsymbol{W}_{u,u} \boldsymbol{e}_{n_0}^T \ , \tag{29}$$

and the design problem reduces to

$$\min_{|\beta_1|^2 \ \dots \ |\beta_U|^2} \quad \sum_{u=1}^{U} \rho_u \Big(1 - |\beta_u|^2 \ \boldsymbol{e}_{n_0} \boldsymbol{W}_{u,u}^H \ \boldsymbol{T}_u^{-1} \ \boldsymbol{W}_{u,u} \ \boldsymbol{e}_{n_0}^T \Big) \tag{30a}$$

$$\text{s.t.} \quad \sum_{u=1}^{U} \ |\beta_u|^2 \leq P_{max} \ . \tag{30b}$$

Hence, we have reduced the original design problem (23) with $U(ML_q + 1)$ variables to the design problem in (30) with only U variables. In particular note that the number of variables is independent of the PEF length L_q, which leads to significant savings in computational complexity. The optimization problem in (30) can be solved using a gradient descent algorithm. At the optimal solution of the problems in (23) and (30), the downlink receiver gain and the uplink equalizing filters satisfy the MMSE criterion. We thus have the following relation between minimum MSE and maximum achievable SINR (cf. e.g. [33]).

Lemma 4.1: The optimal solution of the minimum weighted sum of MSE problem in (23) for the DS-UWB downlink achieves $\mathrm{SINR}_u = 1/\sigma_u^2 - 1$. Similarly, for the dual DS-UWB uplink $\mathrm{SINR}_u^{\mathrm{UL}} = 1/\nu_u^2 - 1$.

V. Results and Discussion

In this section, we present and discuss numerical results to demonstrate the effectiveness of the two proposed multiuser PEF design strategies. The transmission and channel parameters are selected such that representative and insightful conclusions can be drawn. More specifically, we consider BPSK transmission and two different transmission environments, namely CM2 for the residential non-line-of-sight environment and CM6 for the outdoor non-line-of-sight environment, cf. [31]. We assume a center frequency of 6 GHz and a pulse bandwidth of 500 MHz using root-raised cosine pulses with roll-off of 0.6. The overall impulse response including UWB channel impulse response normalized to

unit energy, transmitter pulse shaping and receiver noise rejection filtering, and sampling, are truncated such that about 99% of the energy is captured. This leads to $L_h = 104$ for CM2 and $L_h = 430$ for CM6. The normalized spreading codes are selected as Walsh-Hadamard sequences for experiments with $N = 8$ and as binary mutually orthogonal sequences for experiments with varying N.

A. Downlink Transmission with Power Minimization

We start with the first design approach aiming at minimization of transmit power while meeting user QoS constraints. As an equivalent measure of the transmission power, we show results in terms of the normalized power $\Lambda = \frac{P^{\mathrm{DL}}}{U\sigma_z^2}$. Figure 3 shows Λ averaged over 400 CM2 realizations versus the PEF length L_q for a pre-rake DS-UWB broadcast system with $M = 2$ transmitting antennas and $U = 2$ users with equal MSE requirement $\zeta_1 = \zeta_2 = \zeta$ and spreading code length of $N = 8$. The results are presented for the two MSE requirements $\zeta = 0.08$ and $\zeta = 0.1$. According to (22), these MSE constraints correspond to BERs of approximately 10^{-5} and 10^{-6}, respectively. We note that the optimization problem in (13) can become infeasible, i.e., it is not possible to meet the QoS constraints for all users. In these cases, the channel is discarded and a new channel realization is drawn. (In practice, when the optimization problem is infeasible, the transmitter can a) increase filter length, b) redesign for a lower QoS constraint, or c) temporarily turn off the users with lower priority to maintain QoS constraints for the remaining users to make the problem feasible.) Hence, the results in Figure 3 apply to cases (channels and values of L_q) for which the target MSEs could be achieved for all shown L_q lengths. The presented results clearly demonstrate the effectiveness of the proposed PEF design in decreasing the required transmission power. For example, considering the channel length of 104 taps, power savings of 11 dB for $\zeta = 0.08$ and 3 dB for $\zeta = 0.1$ are achievable by increasing the filter length from 5 to about 10 taps. Since filter optimization and filtering are performed only at the broadcast transmitter, these gains come without increasing the complexity at the receivers. At the same time, power minimization is highly desirable to avoid harmful interference of licensed communication systems by UWB. Furthermore, the inset in Figure 3 shows the number of infeasible channels from the 1000 randomly selected CM2 channel impulse responses where QoS constraint of

$\zeta = 0.08$ is imposed on both users. We observe that increasing the filter length from $L_q = 5$ to 10 taps, the number of infeasible channels drops from 600 to only 40 channels.

B. Transceiver Design for Maximum Quality of Service

We now turn to our second design approach, which maximizes the QoS under a given power budget. For simplicity we assume equal weights $\rho_u = 1$, $u = 1.\ldots,U$, in (30). We start with the $U = 2$ user MISO pre-rake UWB system with $M = 2$ transmitting antennas at the central station, then extend the results to larger numbers of transmitting antennas and more users. Unless otherwise specified, the results are averaged over 500 CM2 channel impulse responses.

Figure 4 shows the effect of the spreading sequence length N on the SINR at $P_{max} = 14$ dB, assuming unit noise variance $\sigma_z^2 = 1$. (Recall that channel impulse responses are normalized to have unit energy). The results show the received SINR for user $u = 1$ with all-pre-rake ($L_p = L_h$) and partial-pre-rake ($L_p = 0.2L_h$) combining with and without pre-equalization. The receiver for the pre-rake UWB without pre-equalization is the same as before and the decision delay n_0 is optimized accordingly. We observe that using PEFs results in an average gain of 2 to 3 dB in SINR at all considered spreading code lengths $N = 2, 4, 6, \ldots, 22$. The upper bound which the achievable SINR approaches is due to the presence of residual interference in the decision variable, which can further be reduced by increasing the PEF length. Interestingly, partial-pre-rake transmission with PEFs not only outperforms partial-pre-rake transmission without pre-equalization but it also achieves an about 1 dB higher SINR compared to all-pre-rake transmission without pre-equalization.

The effect of PEF length on the achievable SINR for all- and partial-pre-rake is shown in Figure 5 for a spreading length of $N = 8$. It can be seen that pre-equalization with moderate filter lengths already achieves significant SINR improvements. Moreover, PEF together with partial-pre-rake UWB can achieve a more than 5 dB gain compared to the partial-pre-rake transmission without PEF. These findings are reinforced by the MSE results shown in Figure 6, for the same scenario as considered in Figure 5, but also including the case of CM6 channels. Longer PEF lengths are required for partial-pre-rake UWB over CM6 channels, because of the significant spread of the channel impulse response. Note that the partial-pre-rake for CM6 applies longer pre-rake filters than the partial-pre-

rake transmission for CM2, and therefore the corresponding MSE curves cross at about $L_q = 30$.

In the following results we highlight the effects of number of transmitting antennas and number of users on system performance. In particular, the average bit-error rate $\mathrm{BER} = \frac{1}{U}\sum_{u=1}^{U}\mathrm{BER}_u$, where BER_u is the BER for user u, for all-pre-rake UWB is considered. Figure 7 shows BER versus transmit power for $U = 2$, $N = 8$, and pre-rake transmission without and with multiuser PEFs of length $L_q = 10$, and different numbers of transmit antennas. CM2 is applied and the markers are the simulated results and lines correspond to analytical results obtained using (22). We observe a good match between the simulated and analytical results, which confirms the Gaussian approximation for MUI and ISI used in (22). The error floor that is present in the case of $M = 2$ antennas is due to the residual interference at PEF length of $L_q = 10$. The addition of transmitter antennas is seen to be highly effective in mitigating the effect of interference. We emphasize, however, that the devised PEF design is crucial to benefit from the increased number of antennas as otherwise especially MUI remains unprocessed. This can be seen from the high error floor for the pre-rake transmission without pre-equalization. Of course, larger M increases hardware complexity.

Finally, Figure 8 shows the BER versus P_{max} for an all-pre-rake UWB system with $M = 4$ antennas. $U = 1, 2, 3, 4$ users and pre-rake transmission without and with multiuser PEFs of length $L_q = 10$ is considered. The case with $U = 1$ user corresponds to the single-user MISO transmission in [13]. We again observe that the proposed PEF design leads to significant performance improvements. In particular, the high error floor experienced by pre-rake UWB without pre-filtering, even for $M = 4 > U = 2$, is overcome using the optimized multiuser PEFs.

C. Alternative Design Approaches

In the following, we discuss alternative design approaches from the CDMA literature, namely [14]–[16], which consider the design of transmit filters for transmission over multipath fading channels. The authors of [14] describe a zero-forcing design approach that nulls a) MUI or b) MUI and ISI, and maximizes the useful received signal power. While this approach works well for the case of mild ISI, it is inefficient for severe ISI experienced in UWB transmission. In particular, a high error floor

occurs if ISI is neglected and only MUI is suppressed, and large PEF lengths and high signal-to-noise ratios (SNRs) are required for low BERs when joint MUI-and-ISI suppression is applied.

References [15], [16] consider an MSE-based design approach in which all users have a common receiver gain, i.e., $\alpha_1 = \alpha_2 = \ldots = \alpha_U$, referred to as transmit Wiener filter [16]. This is a constrained version of our MSE-based PEF design and thus the objective function achieved by our proposed design is always at least as good as that for the common-α design. We have found that allowing for user-specific receiver gains is especially beneficial in cases where the two users are operating at different SNRs. Figure 9(a) presents a scatter plot of the two receiver gains obtained with the proposed and the common-α filter design for the case of $U = 2$ users, $M = 2$ transmitting antennas, PEF length of $L_q = 10$, $P_{max} = 14$ dB, $\sigma^2_{z,1} = 0.1$ and $\sigma^2_{z,2} = 1$, i.e., the two users have a 10 dB difference in their received SNR, and 500 realizations of CM2. We observe that with our method α_1 and α_2 are notably different, demonstrating the difference between our method and the optimization problem and solution from [15], [16]. The corresponding results for the sum MSE and the MSE for the individual users (averaged over the 500 channel realizations) versus the transmit power threshold P_{max} are shown in Figure 9(b). It can be seen that our design achieves a better sum MSE performance compared to the common-α design method according to [15], [16]. This MSE gain, as shown in the subfigure in Figure 9(b), results in a 4 dB SNR-gain at a BER of 10^{-4}. From this discussion and the results presented in Sections V-A and V-B, we conclude that the developed optimization framework is highly effective in enhancing the performance of multiuser pre-rake UWB broadcast systems.

VI. Conclusion

In this paper, we have investigated the design of multiuser PEFs for pre-rake UWB broadcast transmission with multiple antennas at the transmitter. Firstly, motivated by reducing potential interference caused by the UWB system, we have considered the transceiver design to minimize the total transmission power for given QoS requirements. We have shown that the corresponding optimization problem can be written in convex form and solved efficiently. Secondly, we have considered QoS

maximization for a given maximal transmit power. In this case, since the direct optimization of multiuser PEFs is complicated, we have made use of a downlink-uplink duality to formulate a numerically less demanding optimization problem. Hence, we have established a versatile framework for the design of pre-rake UWB broadcast multiuser systems. Numerical results have demonstrated the efficacy of the proposed filter designs to mitigate the effects of MUI and ISI experienced in the considered UWB systems, which otherwise often fail to achieve satisfactory, e.g., BER performance.

REFERENCES

[1] S. Roy, J. Foerster, V. Somayazulu, and D. Leeper, "Ultrawideband Radio Design: The Promise of High-Speed, Short-Range Wireless Connectivity," *Proc. IEEE*, vol. 92, no. 2, pp. 295–311, Feb. 2004.

[2] R. Fontana, "Recent System Applications of Short-Pulse Ultra-Wideband (UWB) Technology," *IEEE Trans. Microwave Theory Tech.*, vol. 52, no. 9, pp. 2087–2104, Sept. 2004.

[3] W. Jones, "No Strings Attached," *IEEE Spectr.*, vol. 43, pp. 16–18, Apr. 2006.

[4] S. Imada and T. Ohtsuki, "Pre-RAKE Diversity Combining for UWB Systems in IEEE 802.15 UWB Multipath Channel," in *Proc. IEEE Conf. on Ultra Wideband Systems and Tech. (UWBST)*, May 2004, pp. 236–240.

[5] K. Usuda, H. Zhang, and M. Nakagawa, "Pre-Rake Performance for Pulse Based UWB System in a Standardized UWB Short-Range Channel," in *Proc. IEEE Wireless Commun. and Networking Conf. (WCNC)*, vol. 2, Mar. 2004, pp. 920–925.

[6] Y.-H. Chang, S.-H. Tsai, X. Yu, and C.-C. Kuo, "Design and Analysis of Channel-Phase-Precoded Ultra Wideband (CPPUWB) Systems," in *Proc. IEEE Wireless Commun. and Networking Conf. (WCNC)*, vol. 2, Apr. 2006, pp. 866–871.

[7] W. Cao, A. Nallanathan, and C. C. Chai, "A Novel High Data Rate Prerake DS-UWB Multiple Access System: Interference Modeling and Tradeoff Between Energy Capture and Imperfect Channel Estimation Effect," *IEEE Trans. Commun.*, vol. 7, no. 9, pp. 3558–3567, September 2008.

[8] W. Cao, Q. Zhang, A. Nallanathan, and H. Garg, "A Novel High Data Rate Prerake UWB System Using Orthogonal Codes and Chip-Interleaving," in *Proc. IEEE Commun. Conf. (ICC)*, Jun. 2009, pp. 1–5.

[9] R. Qiu, C. Zhou, N. Guo, and J. Zhang, "Time Reversal With MISO for Ultrawideband Communications: Experimental Results," *IEEE Antennas Wireless Propagat. Lett.*, vol. 5, pp. 269–273, Dec. 2006.

[10] H. T. Nguyen, I. Kovacs, and P. Eggers, "A Time Reversal Transmission Approach for Multiuser UWB Communications," *IEEE Trans. Antennas Propagat.*, vol. 54, no. 11, pp. 3216–3224, Nov. 2006.

[11] T. Strohmer, M. Emami, J. Hansen, G. Papanicolaou, and A. Paulraj, "Application of Time-Reversal with MMSE Equalizer to UWB Communications," in *Proc. IEEE Global Telecommun. Conf. (GLOBECOM)*, vol. 5, Dec. 2004, pp. 3123–3127.

[12] M. Emami, M. Vu, J. Hansen, A. Paulraj, and G. Papanicolaou, "Matched Filtering with Rate Back-off for Low-Complexity Communications in Very Large Delays Spread Channels," in *Proc. 38th Asilomar Conf. Signals, Systems, and Computers (ASILOMAR)*, Nov. 2004, pp. 218–222.

[13] E. Torabi, J. Mietzner, and R. Schober, "Pre-Equalization for MISO DS-UWB Systems with Pre-Rake Combining," *IEEE Trans. Wireless Commun.*, vol. 8, no. 3, pp. 1295–1307, Mar. 2009.

[14] G. Montalbano, I. Ghauri, and D. Slock, "Spatio-Temporal Array Processing for CDMA/SDMA Downlink Transmission," in *Proc. 32nd Asilomar Conf. Signals, Systems, and Computers (ASILOMAR)*, vol. 2, Nov. 1998, pp. 1337 –1341.

[15] R. Choi and R. Murch, "Transmit MMSE Pre-RAKE Pre-processing with Simplified Receivers for the Downlink of MISO TDD-CDMA Systems," in *Proc. IEEE Global Telecommun. Conf. (GLOBECOM)*, vol. 1, Nov. 2002, pp. 429 – 433.

[16] M. Joham, R. Irmer, S. Berger, G. Fettweis, and W. Utschick, "Linear Precoding Approaches for the TDD DS-CDMA Downlink," in *Proc. International Symposium on Wireless Personal Multimedia Commun. (WPMC)*, vol. 3, Oct. 2003, pp. 323–327.

[17] M. Brandt-Pearce, "Transmitter-based multiuser interference rejection for the down-link of a wireless cdma system in a multipath environment," *IEEE J. Select. Areas Commun.*, vol. 18, no. 3, pp. 407 –417, Mar. 2000.

[18] A. Barreto and G. Fettweis, "Joint signal precoding in the downlink of spread-spectrum systems," *IEEE Trans. Wireless Commun.*, vol. 2, no. 3, pp. 511 – 518, May 2003.

[19] S. Shi, M. Schubert, and H. Boche, "Downlink MMSE Transceiver Optimization for Multiuser MIMO Systems: Duality and Sum-MSE Minimization," *IEEE Trans. Signal Processing*, vol. 55, no. 11, pp. 5436 –5446, Nov. 2007.

[20] M. Schubert and H. Boche, "Solution of the multiuser downlink beamforming problem with individual SINR constraints," *IEEE Trans. Veh. Technol.*, vol. 53, no. 1, pp. 18 – 28, Jan. 2004.

[21] S. Shi and M. Schubert, "MMSE Transmit Optimization for Multi-User Multi-Antenna Systems," in *Proc. IEEE International Conf. on Acoustics, Speech, and Signal Processing (ICASSP)*, vol. 3, Mar. 2005, pp. iii/409 – iii/412.

[22] A. Wiesel, Y. Eldar, and S. Shamai, "Linear precoding via conic optimization for fixed MIMO receivers," *IEEE Trans. Signal Processing*, vol. 54, no. 1, pp. 161 – 176, Jan. 2006.

[23] F. Horlin and L. Vandendorpe, "MU-MIMO Channel Adapted Precoding for MAI/ISI-free Uplink Burst Transmission," *IEEE Trans. Commun.*, vol. 52, no. 1, pp. 100 – 109, Jan. 2004.

[24] X. Yuan, C. Xu, L. Ping, and X. Lin, "Precoder Design for Multiuser MIMO ISI Channels Based on Iterative LMMSE Detection," *IEEE J. Select. Topics Signal Processing,*, vol. 3, no. 6, pp. 1118 –1128, Dec. 2009.

[25] R. Fischer, C. Stierstorfer, and J. Huber, "Precoding for Point-to-Multipoint Transmission over MIMO ISI Channels," in *Proc. International Zurich Seminar on Commun.*, Feb. 2004, pp. 208 – 211.

[26] M. Schubert, S. Shi, E. Jorswieck, and H. Boche, "Downlink Sum-MSE Transceiver Optimization for Linear Multi-User MIMO Systems," in *Proc. 39th Asilomar Conf. Signals, Systems and Computers (ASILOMAR)*, Nov. 2005, pp. 1424 – 1428.

[27] P. Viswanath, V. Anantharam, and D. Tse, "Optimal Sequences, Power Control, and User Capacity of Synchronous CDMA Systems with Linear MMSE Multiuser Receivers," *IEEE Trans. Inform. Theory*, vol. 45, no. 6, pp. 1968–1983, Sep. 1999.

[28] W. Yu, "Uplink-Downlink Duality via Minimax Duality," *IEEE Trans. Inform. Theory*, vol. 52, no. 2, pp. 361–374, Feb. 2006.

[29] A. Mezghani, M. Joham, R. Hunger, and W. Utschick, "Transceiver Design for Multi-user MIMO Systems," in *Proc. ITG Workshop on Smart Antennas*, Mar. 2006.

[30] M. Shenouda and T. Davidson, "On the Design of Linear Transceivers for Multiuser Systems with Channel Uncertainty," *IEEE J. Select. Areas Commun.*, vol. 26, no. 6, pp. 1015–1024, Aug. 2008.

[31] A. F. Molisch, D. Cassioli, C.-C. Chong, S. Emami, A. Fort, B. Kannan, J. Karedal, J. Kunisch, H. G. Schantz, K. Siwiak, and M. Z. Win, "A Comprehensive Standardized Model for Ultrawideband Propagation Channels," *IEEE Trans. Antennas Propagat.*, vol. 54, no. 11, pp. 3151 – 3166, Nov. 2006.

[32] S. Boyd and L. Vandenberghe, *Convex Optimization*. Cambridge University Press, 2004.

[33] U. Madhow and M. Honig, "MMSE Interference Suppression for Direct-Sequence Spread-Spectrum CDMA," *IEEE Trans. Commun.*, vol. 42, no. 12, pp. 3178 –3188, Dec. 1994.

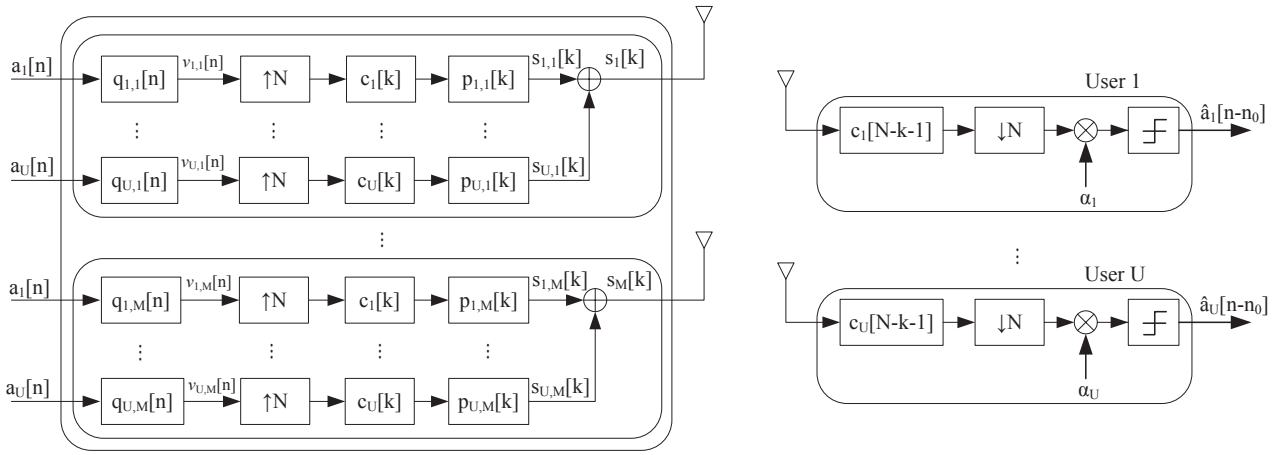

Fig. 1. Block diagram of a downlink multiuser pre-rake UWB broadcast system. Multiuser pre-equalization and pre-rake combining are applied at the base station with M antennas. Single-antenna users with simple slicing detector are considered.

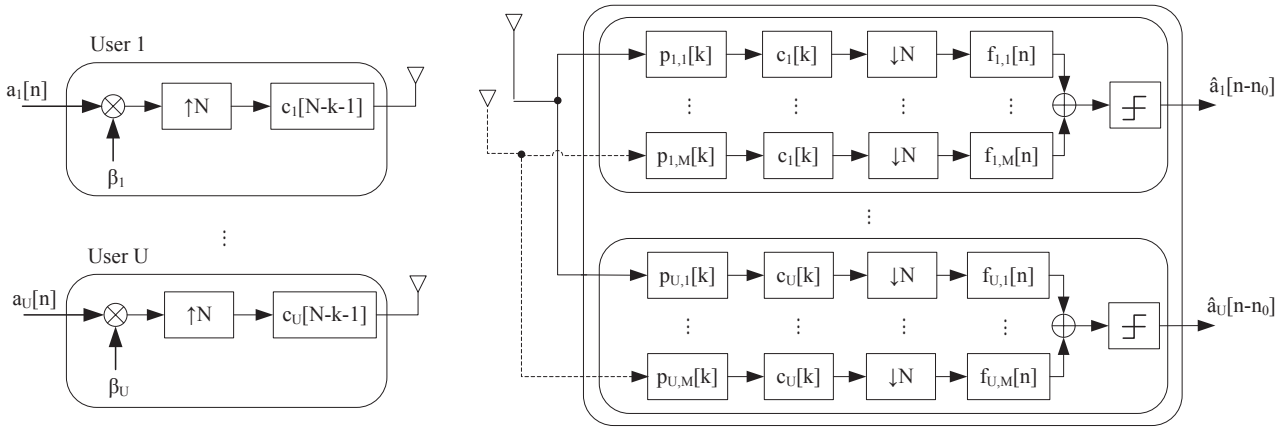

Fig. 2. Block diagram of the equivalent uplink multiuser pre-rake UWB broadcast system consisting of U single antenna transmitters and a central multi-antenna receiver with multiuser equalization filter and rake combining.

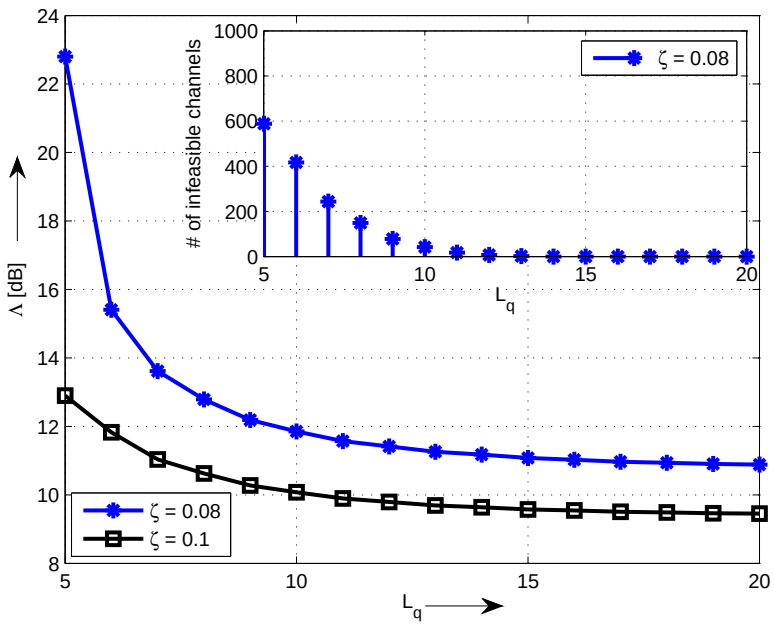

Fig. 3. Required transmission power versus PEF length (L_q) with $M = 2$ transmit antennas for $U = 2$ users and given MSE ($\zeta_1 = \zeta_2 = \zeta$). Averaged results for 400 channel realizations of CM2. Inner figure: Number of infeasible channel realizations versus PEF length.

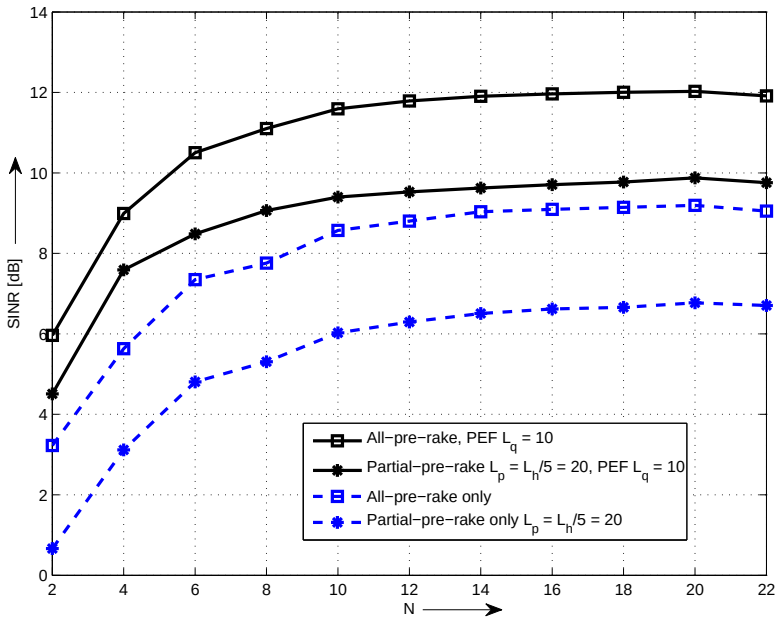

Fig. 4. SINR for user $u = 1$ versus the spreading code length (N). Results averaged over 500 channel realizations of CM2. $M = 2$ transmitting antennas, $U = 2$ users at $P_{max} = 14$ dB.

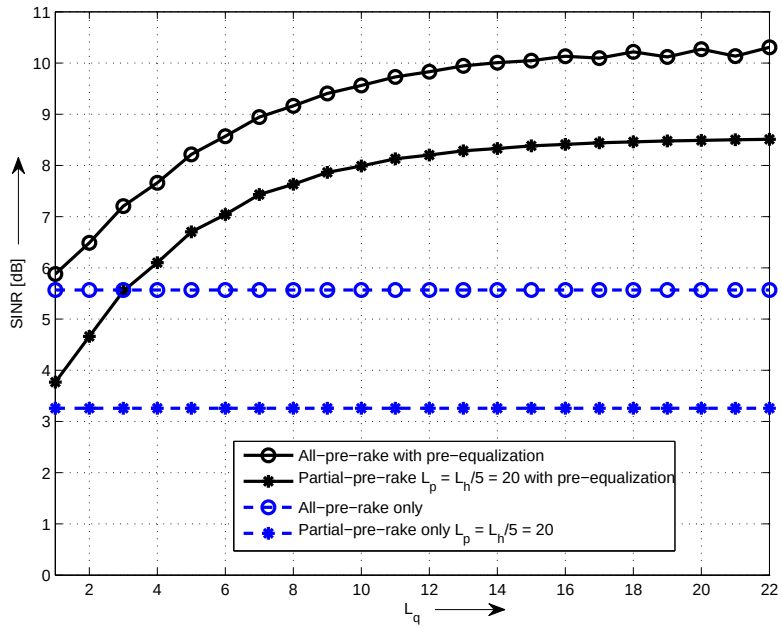

Fig. 5. SINR for user $u = 1$ versus PEF length (L_q). Results averaged for 500 channel realizations of CM2. $M = 2$ transmitting antennas, $U = 2$ users, spreading code length of $N = 8$ and $P_{max} = 14$ dB.

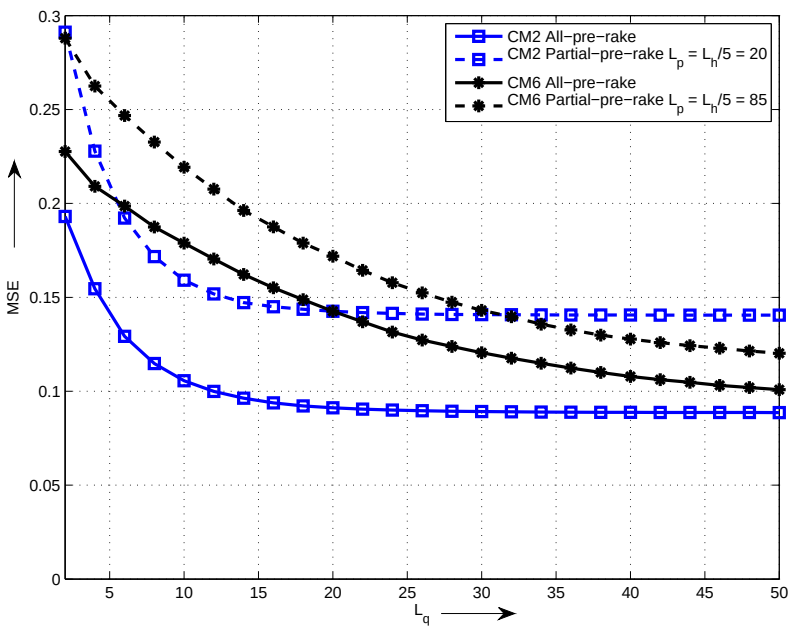

Fig. 6. MSE for user $u = 1$ versus PEF length (L_q). Results averaged over 500 channel realizations of CM2 and CM6, respectively. $M = 2$ transmitting antennas, $U = 2$ users, spreading code length of $N = 8$ and $P_{max} = 14$ dB.

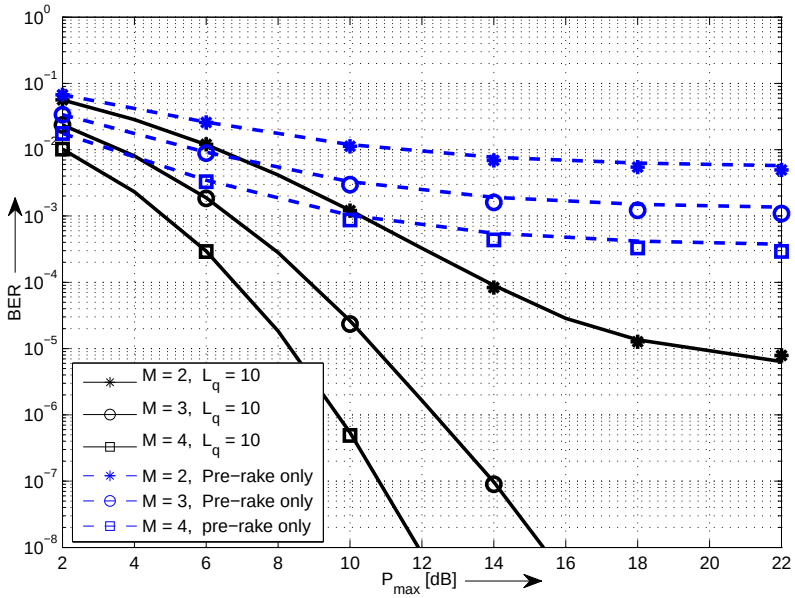

Fig. 7. BER versus the maximum transmission power P_{max}. Results averaged for 500 channel realizations of CM2. $M = 2, 3$ and 4 transmitting antennas, spreading code length $N = 8$ and $U = 2$ users. Solid lines: pre-equalization filter length of $L_q = 10$. Dashed lines: pre-rake transmission without PEF. Markers: simulation results, lines: analytical results.

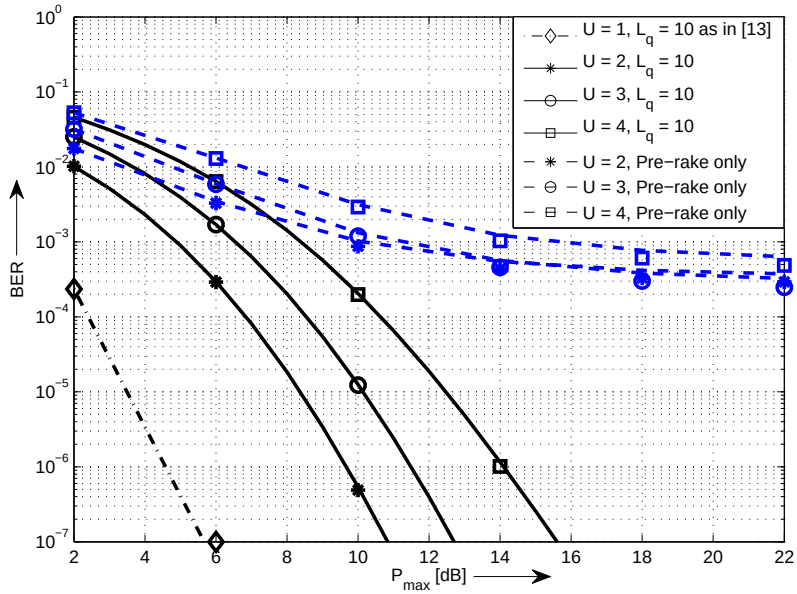

Fig. 8. BER versus the maximum transmission power P_{max}. Results averaged for 500 channel realizations of CM2. $M = 4$ transmitting antennas, spreading code length $N = 8$ for $U = 2, 3$ and 4 users. Solid lines: pre-equalization filter length of $L_q = 10$. Dashed lines: pre-rake transmission without PEF. Dashed dot line: Single-user pre-equalization filter [13] with length $L_q = 10$. Markers: simulation results, lines: analytical results.

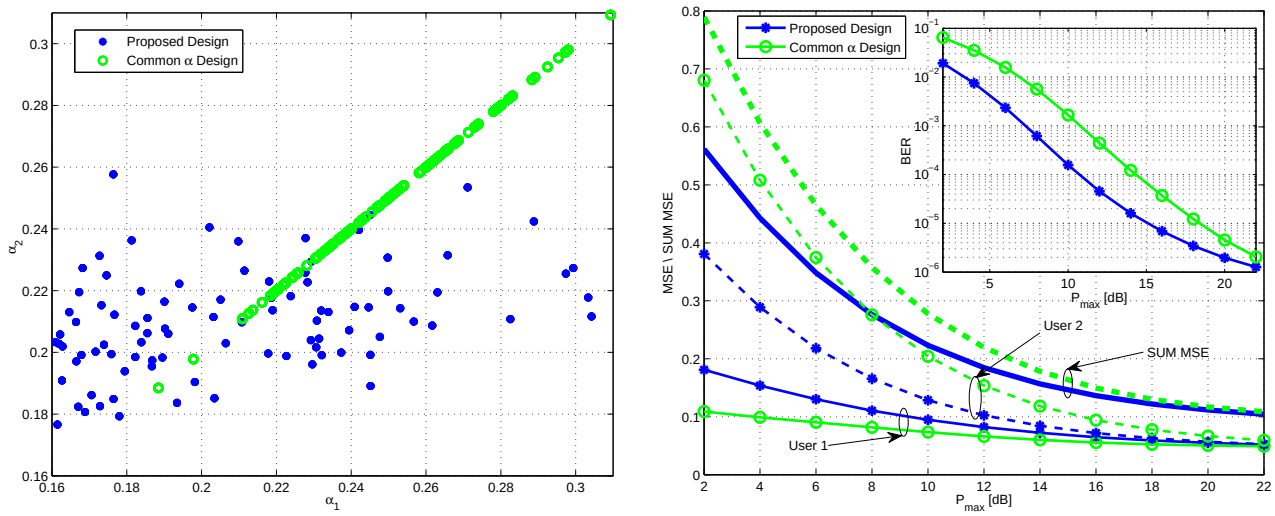

(a) Receiver Gain Comparison

(b) MSE Comparison

Fig. 9. Comparison of filter designs. $U = 2$ users, filter length of $L_q = 10$, $M = 2$ transmitting antennas and unequal receiver thermal noise of $\sigma^2_{z,1} = 0.1$ and $\sigma^2_{z,2} = 1$. a) The first user's equalizing receiver gain α_1 versus second user's receiver gain α_2 for 500 channel realizations of CM2. b) Average MSE results for our proposed design and the design with common receiver gains ("common-α" design).